Rev No.	Description	Date	Name

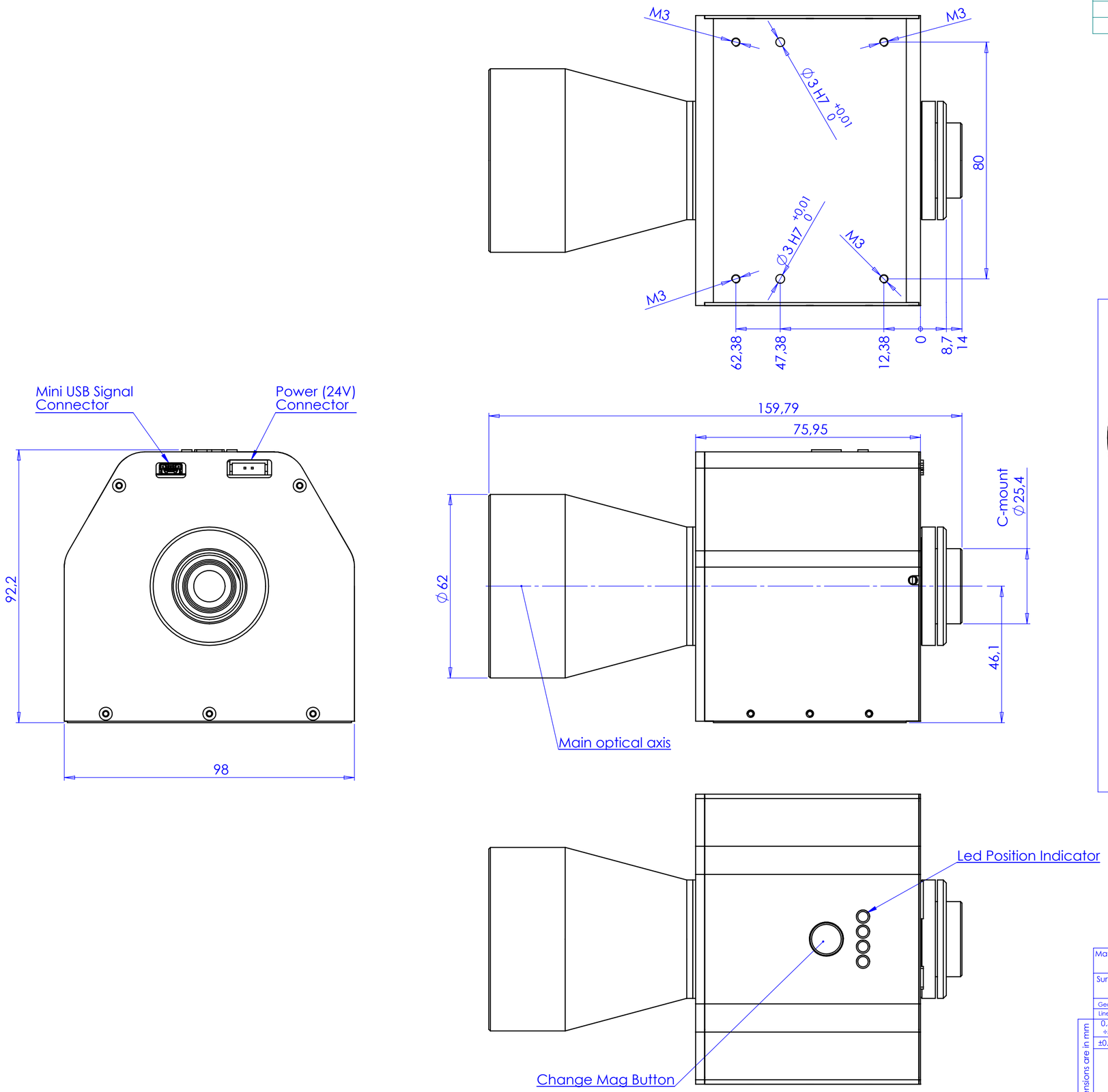

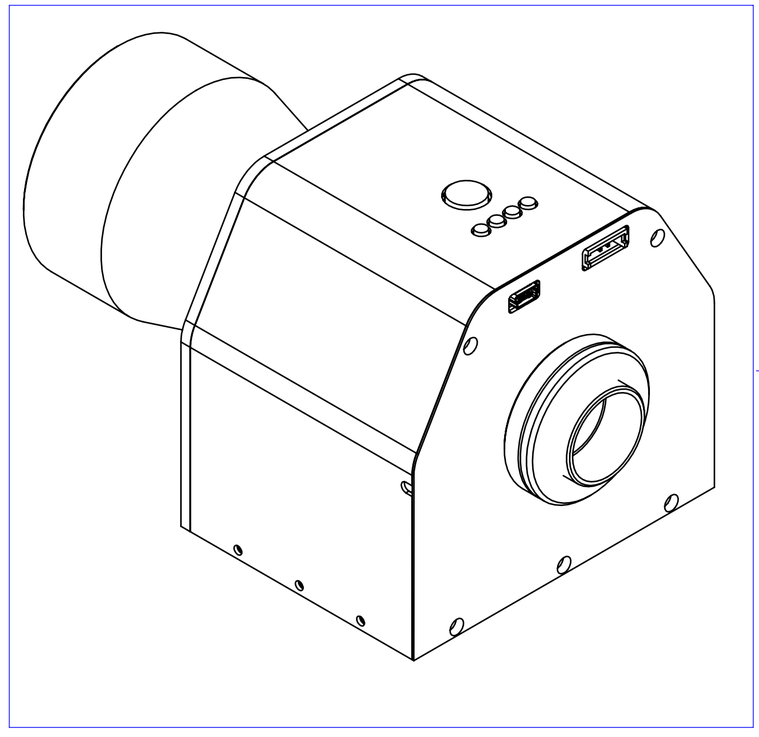

Material								Mass g	Scale 1:1
Surface treatment N.A.								Part No. CO21121	
Geometrical tolerance (ISO 2768-2)						Class	K	Undimensioned bevels	0.5x45°
Linear tolerance (ISO 2768-2)						Class	m		
0.5 ÷3	>3÷ 6	>6÷ 30	>30÷ 120	>120 ÷400	>400÷ 1000	>1000 ÷2000	>2000 ÷4000	Undimensioned radii	R 0.5
±0.1	±0.1	±0.2	±0.3	±0.5	±0.8	±1.2	±2		

Description: MCZR018-004

all dimensions are in mm

	Date	Name
Designed	03/09/2014	Santini
Drawn	19/03/2015	Rodella
Checked		

Drawing No. DP 21121 -A

Sheet 1/1

OPTO ENGINEERING THE TELECENTRIC COMPANY

OPTO ENGINEERING S.r.l. - Mantova Italy - Tel. +39 0376 699111 - www.opto-engineering.com

Secret and confidential - All rights reserved - No copy, dissemination or circulation is allowed unless specifically authorized in writing by OPTO ENGINEERING S.r.l. - Any violation shall be legally prosecuted.